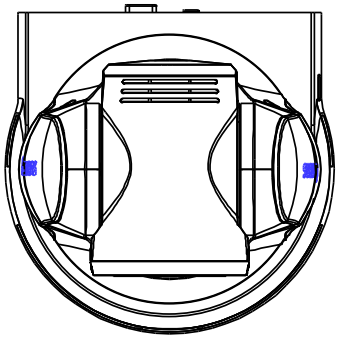

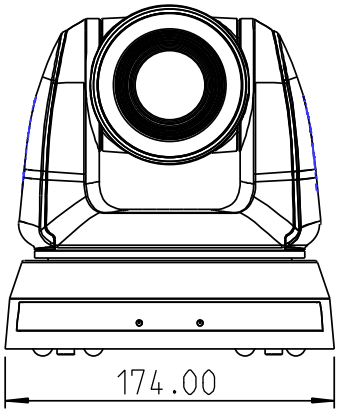
174.00

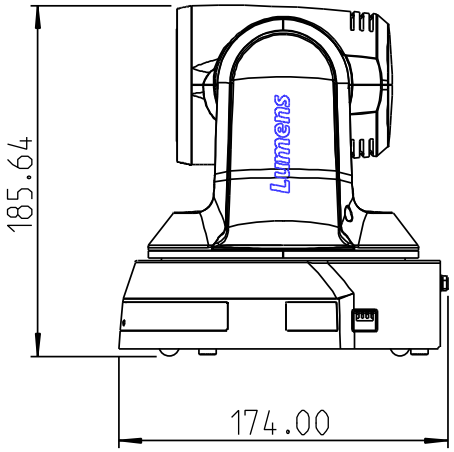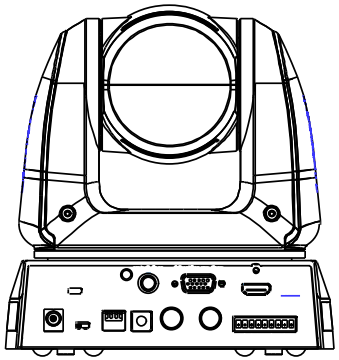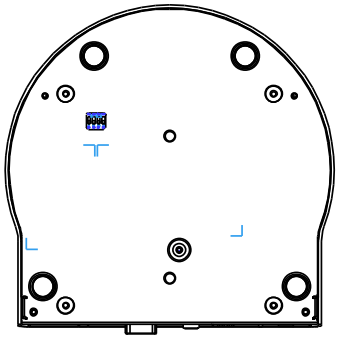
185.64
Lumens
174.00